RESEARCH PAPERS

Acta Cryst. (1999). B**55**, 139–146

Analysis of the environment of beryllium, magnesium and alkaline earth atoms in oxygen-containing compounds

V. A. Blatov,* L. V. Pogildyakova and V. N. Serezhkin

Samara State University, Ac. Pavlov Street 1, 443011 Samara, Russia. E-mail: blatov@ssu.samara.ru

(*Received 25 March 1998; accepted 13 August 1998*)

Abstract

About 2100 inorganic and organometallic compounds containing beryllium, magnesium and alkaline earth atoms (M) were investigated with Voronoi–Dirichlet polyhedra (VDPs). It is shown that the coordination numbers (CNs) of the M atoms in MO_n coordination polyhedra can be determined by means of VDPs without crystal-chemical radii. The distributions of the $M-O$ distances in the coordination spheres of the M atoms are bimodal for M = Be or Mg and monomodal for the other alkaline earth metals. Beryllium and magnesium coordination polyhedra containing weak $M-O$ contacts were classified by variants of their distortions. It is found that the volume of the domains of the Mg, Ca, Sr and Ba atoms is independent of their CNs at CN ≥ 6 (up to 16 for barium). The possibility of using the model of deformable spheres to describe the crystal structure of the compounds investigated is suggested.

1. Introduction

The possibility of using Voronoi–Dirichlet polyhedra (VDPs) in crystal chemistry was first suggested by Niggli (1927). Thirty years had passed when Frank & Kasper (1958) applied VDPs for the calculation of atomic coordination numbers (CNs) in the crystal structures of alloys. They determined the CN of an atom as the number of faces of its VDP. Furthermore, it was found that some other characteristics of VDPs can have physical meaning. In particular, the size of a VDP can conform to the size of the corresponding atom, and the solid angle (Ω) of a VDP face (Fig. 1) can be used as a measure of the strength of the paired chemical bond (O'Keeffe, 1979). The main obstacle to extending the applications of VDPs was the problem of the determination of the ratio

$$K_d = \rho_j / R_j, \qquad (1)$$

where ρ_j and R_j are the distances from the central atom of a VDP to its jth face or to the jth atom of the coordination sphere, respectively. If the substance considered is simple then $K_d = 0.5$; if the central atom and the jth atom have similar sizes (*e.g.* the atoms in several alloys) $K_d \simeq 0.5$, but in most cases K_d cannot be determined *a priori*. In particular, it is assumed that in ionic compounds the K_d value for a cation–anion pair is normally far from 0.5. All known methods for the calculation of K_d (Hoppe, 1970; Fisher *et al.*, 1971; Gerstein *et al.*, 1995) use the values of atomic radii (ionic, covalent or van der Waals). Thus, the determination of atomic domains requires that their sizes are already known! The seemingly hopeless nature of such a situation leads to a limited application of VDPs in crystal-chemical analysis.

Recently, Blatov *et al.* (1995) showed that the VDP characteristics, being invariants of similarity transformation [for instance, Ω, number of faces, dimensionless normalized second moment of inertia (G_3)], can have clear physical meaning irrespective of the K_d value if the central atom of a VDP is surrounded by atoms of a

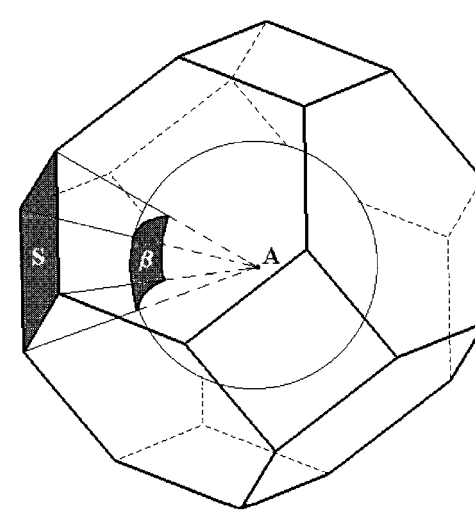

Fig. 1. The definition of the solid angle (Ω) of a VDP face. Ω is numerically equal to the segment β of a sphere with unit radius cut by the pyramid with the atom A at the top and the face S at the bottom.

© 1999 International Union of Crystallography
Printed in Great Britain – all rights reserved

single type. In particular, G_3, calculated according to the formula

$$G_3 = (1/3) \int_{\mathrm{VDP}} r^2 dV_{\mathrm{VDP}} / \{V_{\mathrm{VDP}}\}^{5/3}, \qquad (2)$$

where V_{VDP} is the VDP volume and r is the distance between the central atom and a point inside the VDP, can be used as a degree of VDP sphericity. The sphere has the smallest G_3 value (0.076967...) among three-dimensional solids and the greater the G_3 value, the less the VDP sphericity. In particular, a sufficiently small G_3 value indicates that the coordination sphere of the central atom is formed by mainly non-directed (central) forces. According to Blatov *et al.* (1994), if $G_3 > 0.082$ then chemical interactions in the coordination sphere have a significant covalent component.

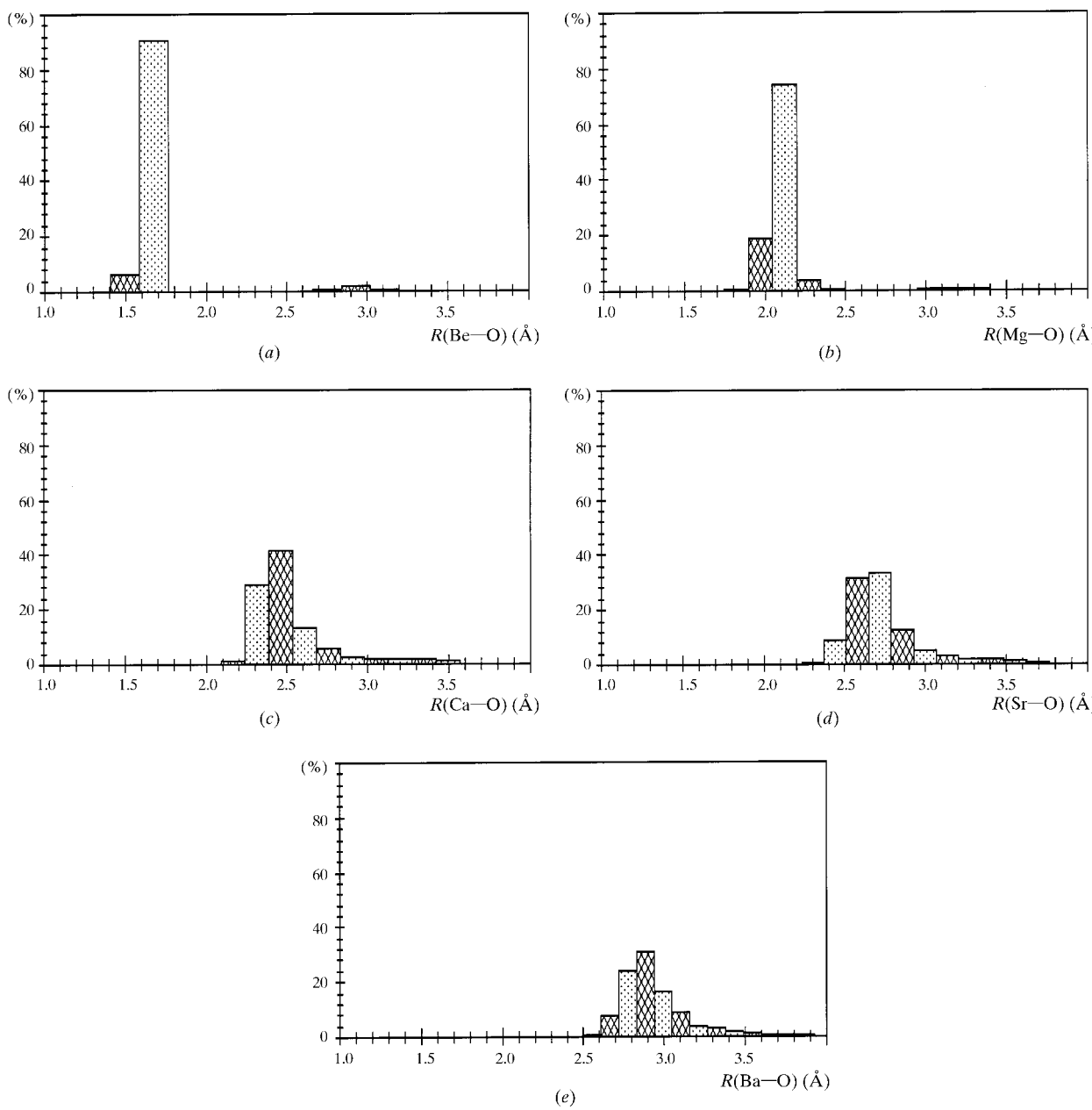

Fig. 2. The distribution of $R(M-\mathrm{O})$ in oxygen-containing compounds of (*a*) beryllium (519 Be—O contacts), (*b*) magnesium (3841 Mg—O contacts), (*c*) calcium (9232 Ca—O contacts), (*d*) strontium (4782 Sr—O contacts) and (*e*) barium (6698 Ba—O contacts). Only the 'direct' contacts with $\Omega > 1.5\%$ were taken into account. The values on the ordinate axis are expressed as a percentage of the total number of $M-\mathrm{O}$ contacts of a given sort.

The problem of K_d determination disappears if relative values of VDP parameters are studied instead of absolute ones. In particular, it has been shown that for alkali metal atoms in an oxygen environment (Blatov *et al.*, 1998) the VDP volume does not depend on the CN. The following procedure for the determination of the CN of alkali metal atoms was used.

(i) A face of a VDP can make a contribution to the CN only if the corresponding Ω value exceeds its standard uncertainty caused by the errors of the structural experiment [$\sigma(\Omega) \simeq 1.5\%$ of the total solid angle of 4π steradians].

(ii) A face of a VDP of an M atom should correspond to the so-called 'direct' neighbour (O'Keeffe, 1979), *i.e.* to the L atom for which the $M-L$ segment crosses the VDP face. Only in this case should the $M-L$ contact be considered as a chemical bond and taken into account during the CN calculation.

(iii) Remaining $M-L$ contacts are qualified as valent (ionic-covalent or mainly ionic) according to a mono- or

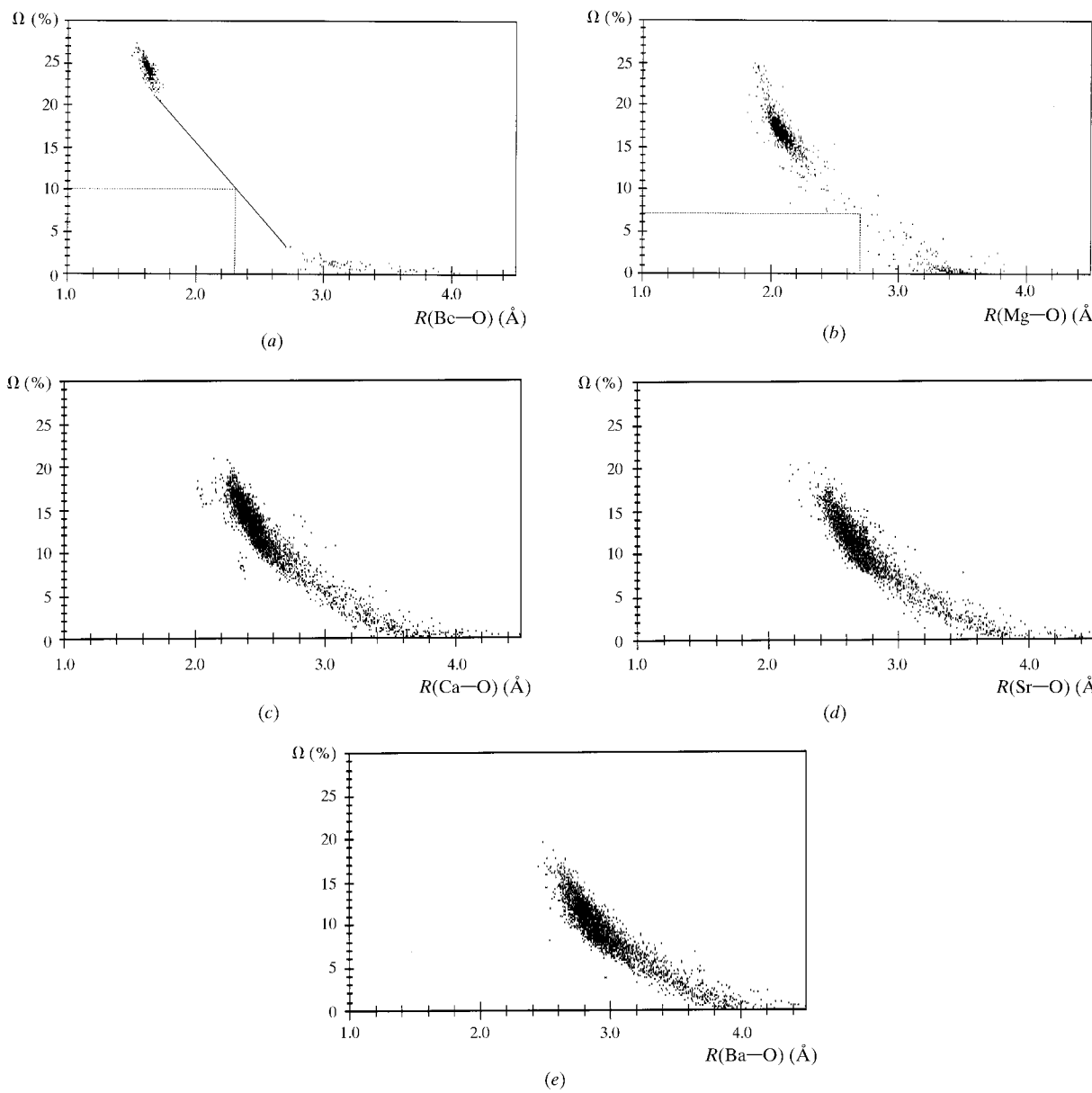

Fig. 3. $\Omega(R)$ dependence of VDPs of (*a*) beryllium, (*b*) magnesium, (*c*) calcium, (*d*) strontium and (*e*) barium in oxygen-containing compounds. On each diagram the number of experimental points with $\Omega > 1.5\%$ coincides with those given in the legend for Fig. 2. The dotted lines specify the conformity between R_{min} and Ω_{min}. The solid line shows interpolation of the dependence of $\Omega(R)$ for Be—O contacts in the area of 'forbidden' interatomic distances.

bimodal view of the distribution of interatomic distances. If the distribution is bimodal, the total CN value should be written in the form of two components, the first of which corresponds to the classic CN.

Although the hypothesis of constancy of atomic volume is well known in crystal chemistry (Pearson, 1972), it has been verified in detail only for a few elements (U, Zr and alkali metals) (see Blatov *et al.*, 1995; Blatov & Serezhkin, 1997; Blatov *et al.*, 1998). Therefore, it was of interest to check the correctness of such a hypothesis for beryllium, magnesium, calcium, strontium and barium atoms (M), the CNs of which vary in the crystal structures of oxygen-containing compounds over a rather wide range [from 3 to 12 according to Shannon (1976)].

2. Experimental

Crystal-structure information for about 2100 inorganic and organometallic oxygen-containing compounds containing M atoms was taken from the Cambridge Structural Database (version 5.11, release of April 1996; see also Allen *et al.*, 1979) and from original publications. The VDPs were computed by the 'gift wrapping' procedure (Preparata & Shamos, 1985) based on the construction of the convex hull for the image points with coordinates $(2x_j/R_j^2, 2y_j/R_j^2, 2z_j/R_j^2)$, where (x_j, y_j, z_j) are the coordinates of an arbitrary atom in the crystal structure in relation to the central atom of a VDP and R_j is the distance between them. All calculations were performed with the program *Dirichlet* included in the program package *TOPOS* (Blatov *et al.*, 1995). Compounds were included if the following conditions were fulfilled simultaneously: (i) the crystal structure of the compound was determined with a factor of discrepancy of no more than 10%; (ii) according to the description of the crystal structure given by the authors, it contains M atoms with environments consisting of only O atoms; (iii) the crystal structure does not contain statistically disordered M and/or O atoms.

As in the case of compounds of alkali metals, one of the main problems during the crystal-chemical analysis of compounds of M atoms is ambiguity in the estimation of the CN. For example, according to Shannon (1976), the sum of the ionic radii $r(M^{2+}) + r(O^{2-})$, usually a criterion of the maximum length of the M—O contact corresponding to a significant interatomic interaction, can vary within the range 1.51–3.03 Å depending on the type of M atom and the CNs of the M and O atoms. However, in the structures of the compounds considered here there are M—O contacts (M = Ca, Sr or Ba) with distances which insignificantly exceed the higher limit of this range. In this case, their inclusion or exclusion from the coordination sphere of the M atoms solely on the basis of the analysis of M—O distances is subjective. Therefore, we determined the CNs of the M atoms by analysing the interatomic distances $R(M—O)$ and the corresponding $\Omega(M—O)$ simultaneously.

As can be seen from Figs. 2(*a*) and 2(*b*), the $R(M—O)$ distributions for beryllium and magnesium compounds consist of two parts: the left-hand part characterizes strong M—O bonds of ionic-covalent type and the right-hand part includes additional weaker M—O contacts with mainly ionic nature. As mentioned above, only the 'direct' M—O contacts with $\Omega(M—O) > 1.5\%$ were taken into account. The values $R_{min} \simeq 2.3$, 2.7 Å and $R_{max} \simeq 1.6$, 2.1 Å are the positions of the minima and main maxima of the distributions. Note that there is a range of 'forbidden' distances for Be—O contacts, unlike Mg—O contacts (Figs. 3*a*, 3*b*). Therefore, the centre of this range was formally accepted as the R_{min} value for beryllium compounds. The $R(M—O)$ distributions for the other alkaline earth atoms are monomodal with maxima at $R_{max} \simeq 2.4$, 2.7 and 2.9 Å. These numbers of maxima were found in $R(M—O)$ distributions for the corresponding alkali metals (Blatov *et al.*, 1998).

Choosing the value of $\Omega(M—O)$ as a more accurate characteristic of the strength of the interatomic M—O bond, we found that on the basis of the dependence of $\Omega(R)$ (Figs. 3*a*, 3*b*) $\Omega_{min} \simeq 10$ and 7% correspond to $R(M—O) \simeq R_{min}$ for M = Be and Mg, respectively. The indicated values of Ω_{min} were accepted as the lower limits of the $\Omega(M—O)$ values at which the corresponding M—O contact was taken into consideration during the calculation of the CNs of Be and Mg atoms. For the other alkaline earth atoms $\Omega_{min} = \sigma(\Omega) \simeq 1.5\%$.

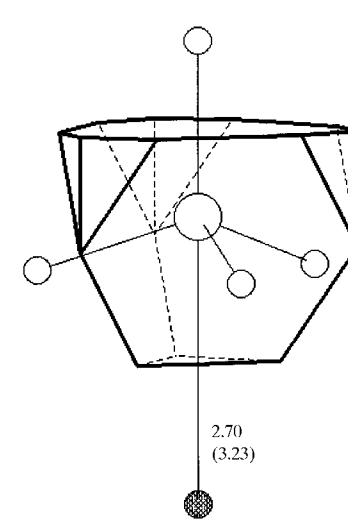

Fig. 4. A typical form of a BeO_5 coordination polyhedron with CN(Be) = 4 + 1 in the crystal structure of α-BeO at 5.0 GPa (Hazen & Finger, 1986). The length (Å) and solid angle (in parentheses, as a percentage of 4π steradians) are shown for the additional weak Be—O contact.

3. Results and discussion

In Tables 1–5 the results of calculations of the basic geometrical characteristics of VDPs are given, namely, their volume ($V_{\rm VDP}$), surface area ($S_{\rm VDP}$), radius of a sphere the volume of which is equal to $V_{\rm VDP}$ ($R_{\rm sd}$), G_3, which is characteristic of the degree of sphericity of a VDP, and the value of the shift of the M atom from the centre of gravity of its VDP (D_A) for 3056 crystallographic sorts of M atoms in the structures of the compounds considered, for which the CNs of the M atoms were determined using the method described above. Tables 1–5 show that the effect of volume constancy previously discovered for atomic domains of alkali atoms at different CNs (CN $\geq$ 6) (Blatov *et al.*, 1998) is also observed in the case of M atoms. Note that,

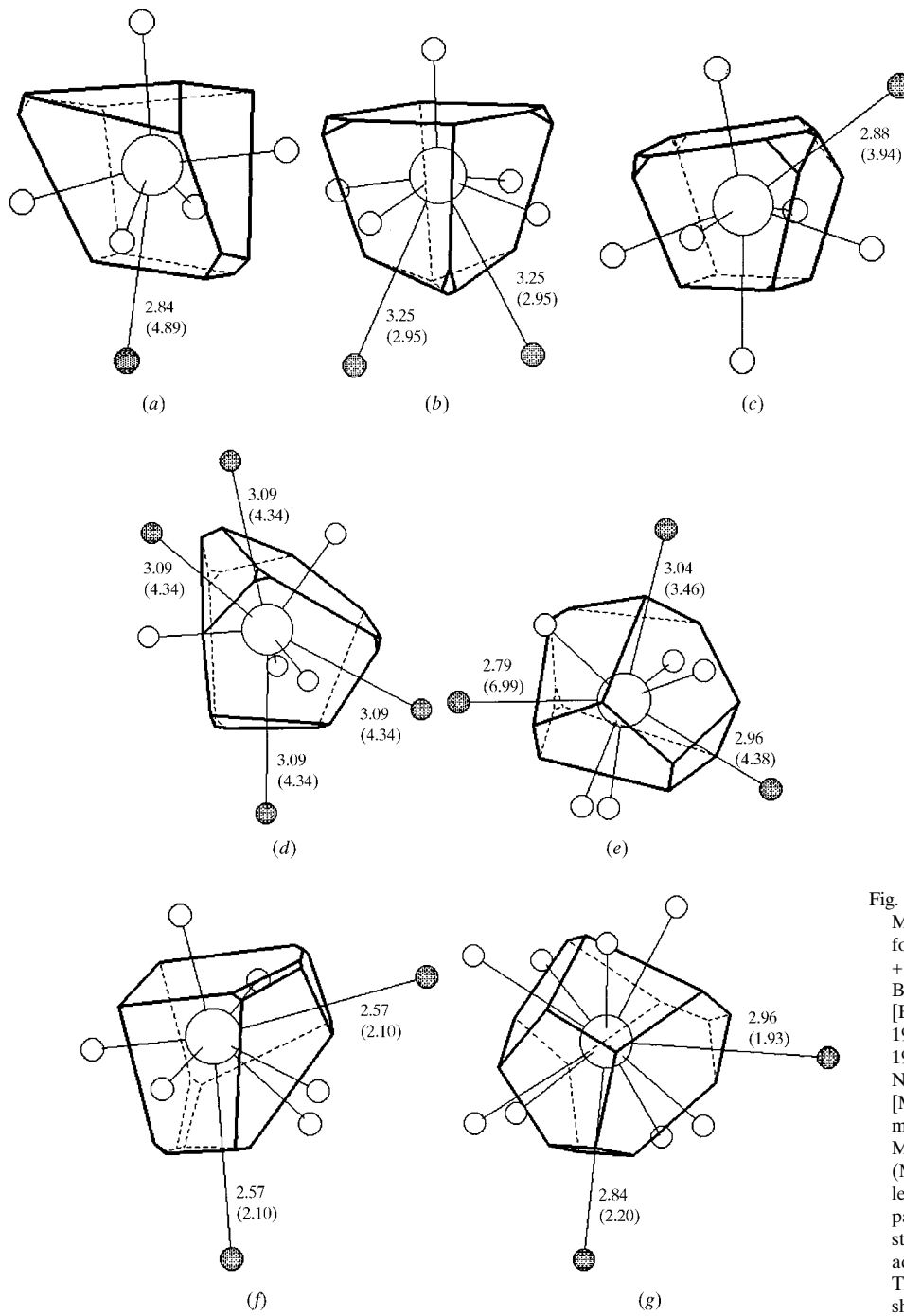

Fig. 5. The variants of distortion of MgO_n coordination polyhedra found for CN(Mg) equal to (*a*) 5 + 1 [$Mg_3Ca_3(PO_4)_4$; Dickens & Brown, 1971], (*b*) 5 + 2 [$BiMg_2(VO_6)$; Huang & Sleight, 1992], (*c*) 6 + 1 (Dickens & Brown, 1971), (*d*) 4 + 4 [$NaKMg_5Si_{12}O_{30}$, Nguyen *et al.*, 1980], (*e*) [$MgO(B_2O_3)_2$; Bartl & Schuckmann, 1966], (*f*) 6 + 2 ($MgSiO_3$; Murakami *et al.*, 1984), (*g*) 8 + 2 ($MgSiO_3$; Kudoh *et al.*, 1987). The length (Å) and solid angle (in parentheses, as a percentage of 4π steradians) are shown for each additional weak Mg—O contact. The O atoms of these contacts are shaded.

Table 1. *The characteristics of VDPs of Be atoms depending on CN*

The following VDP parameters are given: volume (V_{VDP}), surface area (S_{VDP}), radius of a sphere the volume of which is equal to V_{VDP} (R_{sd}), G_3, which is characteristic of the degree of sphericity of a VDP, and the value of the shift of the M atom from the centre of gravity of its VDP (D_A). The values of fiducial intervals which correspond to 95% of fiducial probability are given in parentheses. The values of the root-mean-square deviations of D_A are specified in parentheses since the distributions of D_A values deviate appreciably from a normal distribution for all CNs.

CN of Be atoms	No. of compounds	No. of Be atoms	V_{VDP} (Å^3)	S_{VDP} (Å^2)	R_{sd} (Å)	$G_3 \times 10^3$	D_A (Å)
3	1	1	11.4	32.1	1.40	116.2	0.0
4	97	125	7.3 (1)	25.7 (2)	1.20 (1)	99.7 (5)	0.04 (3)

Table 2. *The characteristics of VDPs of Mg atoms depending on CN*

See Table 1 for details. In the last row the data for all crystallographic sorts of M atoms are taken into consideration independently of their CNs.

CN of Mg atoms	No. of compounds	No. of Mg atoms	V_{VDP} (Å^3)	S_{VDP} (Å^2)	R_{sd} (Å)	$G_3 \times 10^3$	D_A (Å)
4	14	15	11.5 (2)	32 (1)	1.40 (1)	93 (2)	0.03 (6)
5	14	14	10.8 (4)	30 (1)	1.38 (2)	91 (2)	0.11 (5)
6	412	591	9.2 (1)	26.3 (1)	1.30 (1)	84.1 (1)	0.02 (3)
8	9	10	9.4 (4)	25.2 (9)	1.31 (2)	81.9 (6)	0.03 (3)
4–8	438	630	9.3 (1)	26.5 (1)	1.30 (1)	84.4 (2)	0.02 (4)

Table 3. *The characteristics of VDPs of Ca atoms depending on CN*

See Tables 1 and 2 for details.

CN of Ca atoms	No. of compounds	No. of Ca atoms	V_{VDP} (Å^3)	S_{VDP} (Å^2)	R_{sd} (Å)	$G_3 \times 10^3$	D_A (Å)
6	145	177	13.1 (2)	33.1 (3)	1.46 (1)	84.7 (3)	0.04 (4)
7	164	218	13.4 (2)	32.9 (3)	1.47 (1)	84.1 (2)	0.07 (4)
8	376	467	13.1 (2)	31.7 (3)	1.46 (1)	82.4 (2)	0.04 (4)
9	152	181	13.4 (2)	31.7 (3)	1.47 (1)	82.1 (2)	0.06 (4)
10	63	71	13.6 (4)	31.7 (6)	1.48 (1)	81.7 (5)	0.05 (4)
11	12	12	14.1 (6)	32.0 (1)	1.50 (2)	80.9 (4)	0.10 (4)
12	31	33	13.6 (4)	31.8 (6)	1.48 (1)	80.1 (7)	0.03 (4)
6–12	794	1159	13.2 (1)	32.1 (1)	1.47 (1)	82.9 (1)	0.05 (4)

Table 4. *The characteristics of VDPs of Sr atoms depending on CN*

See Tables 1 and 2 for details.

CN of Sr atoms	No. of compounds	No. of Sr atoms	V_{VDP} (Å^3)	S_{VDP} (Å^2)	R_{sd} (Å)	$G_3 \times 10^3$	D_A (Å)
6	23	24	15.7 (6)	37 (1)	1.55 (2)	85 (1)	0.00 (1)
7	9	10	16.4 (8)	38 (1)	1.57 (3)	85 (1)	0.09 (6)
8	101	115	15.6 (2)	35.5 (3)	1.55 (1)	82.7 (4)	0.06 (7)
9	154	178	15.7 (1)	35.1 (2)	1.55 (1)	81.4 (2)	0.06 (4)
10	62	70	15.7 (2)	34.7 (4)	1.55 (1)	81.1 (3)	0.05 (4)
11	12	12	16.0 (5)	34.7 (8)	1.56 (1)	80.4 (7)	0.05 (3)
12	90	98	15.8 (2)	33.8 (3)	1.56 (1)	79.5 (2)	0.02 (4)
13	3	3	16 (1)	34 (2)	1.56 (4)	79.6 (8)	0.06 (1)
6–13	388	510	15.7 (1)	35.0 (2)	1.55 (1)	81.5 (2)	0.05 (5)

Table 5. *The characteristics of VDPs of Ba atoms depending on CN*

See Tables 1 and 2 for details.

CN of Ba atoms	No. of compounds	No. of Ba atoms	V_{VDP} (Å^3)	S_{VDP} (Å^2)	R_{sd} (Å)	$G_3 \times 10^3$	D_A (Å)
6	4	4	19.5 (8)	42 (2)	1.67 (3)	86 (2)	0.01 (2)
7	2	2	20 (1)	42 (2)	1.67 (3)	83.3 (6)	0.08 (2)
8	36	37	18.7 (4)	40.0 (6)	1.65 (1)	82.6 (4)	0.05 (6)
9	103	118	18.9 (2)	39.6 (3)	1.65 (1)	81.8 (3)	0.06 (5)
10	137	150	18.5 (2)	38.4 (3)	1.64 (1)	80.6 (1)	0.05 (4)
11	65	67	18.8 (2)	38.6 (3)	1.65 (1)	80.8 (3)	0.07 (5)
12	165	231	18.5 (2)	37.6 (3)	1.64 (1)	79.8 (2)	0.05 (4)
13	7	8	18.8 (6)	38.1 (7)	1.65 (2)	80.0 (7)	0.05 (4)
14	5	9	19.4 (7)	39 (1)	1.67 (2)	79.3 (8)	0.02 (2)
15	2	3	18.1 (7)	36.7 (6)	1.63 (2)	79 (1)	0.04 (7)
16	2	2	20 (2)	39.7 (6)	1.68 (6)	80 (5)	0.00 (0)
6–16	452	631	18.6 (1)	38.5 (2)	1.64 (1)	80.6 (1)	0.05 (5)

in accordance with the results of the calculations, the most frequent CN (specified in brackets) increases regularly along the series Be (4) → Mg (6) → Ca (8) → Sr (9) → Ba (12). At CN ≥ 8 for all M atoms the value of G_3 is already less than 0.082, within twice its standard uncertainty which, according to the criterion of Blatov *et al.* (1994), allows one to consider M—O contacts as mainly ionic in the corresponding coordination polyhedra. In the case of beryllium and magnesium compounds (Tables 1 and 2) one can see that at CN < 6 the change of the type of interatomic interaction results in an appreciable increase in the size of the atomic domain. This effect [found also for oxygen-containing compounds of zirconium (Blatov & Serezhkin, 1997)] is probably caused by significant transformation of the electronic state of the central atom during the transition between the complexes with six-, five-, four- or threefold coordination. The coordination polyhedra characterized by $G_3 \gg 0.082$ and CN < 6 are mainly observed in beryllium compounds, for which the formation of ionic-covalent bonds is more typical than for the compounds of the other metals considered.

Although the coordination polyhedra of Be and Mg are regular or nearly regular tetrahedra and octahedra, respectively [the only compound where one of the two Be atoms has an abnormal CN of 3 is $SrBe_3O_4$ (Harris & Yakel, 1969)], in some cases the additional weaker contacts (Figs. 2*a*, 2*b*) should be taken into account. In such compounds the coordination polyhedra of the M atoms are usually distorted and the CN consists of two parts, $(n_1 + n_2)$. An analysis of 16 Be—O contacts with R(Be—O) > 2.3 Å shows that almost all of them correspond to CN(Be) = 4 + 1 with coordination polyhedra in the form of strongly distorted trigonal bipyramids (a typical example is given in Fig. 4). The same analysis of 65 Mg—O contacts with R(Mg—O) > 2.7 Å discovers numerous variants of distortion. Fig. 5 shows all of them with an example for each corresponding coordination polyhedron. Whereas additional ionic Be—O contacts are always significantly weaker than strong ionic-covalent interactions (Fig. 3*a*, Fig. 4) and evidently do not make an appreciable contribution to the crystal lattice energy, the coordination spheres of Mg atoms can include Mg—O contacts of intermediate type (Fig. 3*b*). Therefore in different compounds one can find both a distorted form of a given coordination polyhedron with weak Mg—O contacts and a form in which the corresponding contacts are much stronger. For example, the form 6 + 2 in $MgSiO_3$ (Fig. 5*f*) transforms to the form 8 + 2 (Fig. 5*g*) at high pressure.

Let us emphasize that the fact of cation volume constancy is contrary to the well known increase of ionic radii with increasing CN. This is because M atoms can be considered as deformable spheres at CN ≥ 6 and not as hard spheres with a given radius. The correctness of using such a model is confirmed by the isotropic character of the distortion of their domains, since D_A values are nearly equal to zero for all CNs (Tables 1–5). The degree of deformation of an atomic domain decreases with increasing size of the M atom; this is reflected both in a decrease of the averaged G_3 value in the series Be → Mg → Ca → Sr → Ba and in the change of the radii of the spherical domains (R_{sd}) in comparison with the values of the 'physical' radii of the corresponding ions (R_{ion}) given by Shannon (1976) (Fig. 6). Note that if the domain of a deformable atom is approximated by a VDP, R_{sd} can be considered to be the value which is proportional to the radius of the atom in the given electronic state in a spherically averaged crystal field. The significant deformation of the domains of Be and Mg atoms, caused by the formation of ionic-covalent bonds, results in appreciable increase of their R_{sd} in comparison with R_{ion}. In the case of Ba atoms, the difference between R_{sd} and ionic radius does not exceed 0.04 Å (Fig. 6) which, in our opinion, also indicates appreciable non-directivity of the Ba—O interactions. Actually, small values of G_3 for the VDPs of Ba atoms indicate appreciable sphericity of their domains and correctness of the spherical-atom model used to describe them, which is used for the determination of the ionic radii. The spherical-atom model should give a significant error for the description of Be and Mg atoms, since the sphere, corresponding to the atom, is actually inscribed within a polyhedral domain which is far from spherical. This results in the large values of the difference $R_{sd} - R_{ion}$ for these atoms. In the sequence of the change of $R_{sd} - R_{ion}$ considered, Ca and Sr atoms regularly hold intermediate positions. Note an interesting detail: during the transition from alkali atoms to the corresponding M atoms within one period (for the pair Li–Be we took for comparison the atoms with CN =

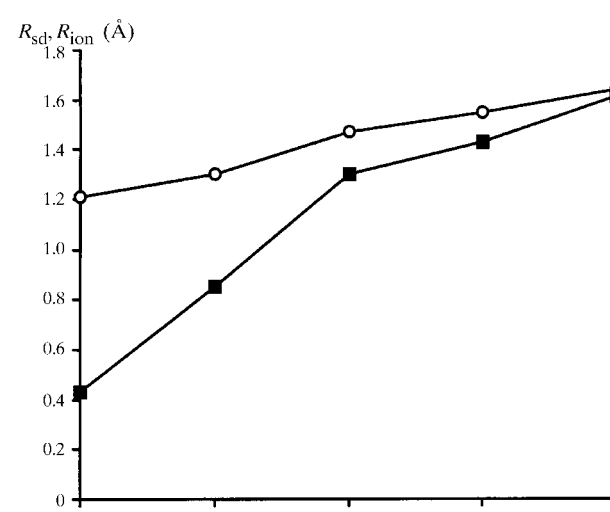

Fig. 6. The dependence of the values of the ionic radius R_{ion} (■) and R_{sd} (○) on the sort of M atom. The average values of the ionic radii for all CNs given by Shannon (1976) are chosen as R_{ion}, namely, 0.43 (Be^{2+}), 0.85 (Mg^{2+}), 1.30 (Ca^{2+}), 1.43 (Sr^{2+}) and 1.61 Å (Ba^{2+}).

4 owing to the influence of the CN on the characteristics of their domains), R_{sd} decreases by practically the same value independently of the period (0.21, 0.24, 0.23, 0.23 and 0.24 Å for the pairs Li–Be, Na–Mg, K–Ca, Rb–Sr and Cs–Ba). A similar effect is observed for the differences in the values of orbital radii of isolated alkali and *M* atoms (Waber & Cromer, 1965); however, in the latter the difference is approximately twice as high (0.546, 0.434, 0.472, 0.451 and 0.458 Å, respectively). This, in our opinion, is caused by the redistribution of the electron density and the compression of the electronic shells of these atoms during the formation of chemical bonds in a crystalline substance.

This work was carried out with the financial support of the Russian Fund of Fundamental Investigations (RFFI) (project 97-03-33218). The authors are also indebted to the RFFI for covering the licence fee for the use of the Cambridge Structural Database, which was employed for the analysis of the structural results discussed in this paper (project 96-07-89187).

References

Allen, F. H., Bellard, S., Brice, M. D., Cartwright, B. A., Doubleday, A., Higgs, H., Hummelink, T., Hummelink-Peters, B. G., Kennard, O., Motherwell, W. D. S., Rodgers, J. R. & Watson, D. G. (1979). *Acta Cryst.* B**35**, 2331–2339.

Bartl, H. & Schuckmann, W. (1966). *Neues Jahrb. Mineral. Monatsh*. pp. 142–148.

Blatov, V. A., Pogildyakova, L. V. & Serezhkin, V. N. (1998). *Z. Kristallogr.* **213**, 202–209.

Blatov, V. A., Pol'kin, V. A. & Serezhkin, V. N. (1994). *Crystallogr. Rep.* **39**, 457–463.

Blatov, V. A. & Serezhkin, V. N. (1997). *Russ. J. Coord. Chem.* **23**, 177–181.

Blatov, V. A., Shevchenko, A. P. & Serezhkin, V. N. (1995). *Acta Cryst.* A**51**, 909–916.

Dickens, B. & Brown, W. E. (1971). *Tschermaks Mineral. Petrogr. Mitt.* **16**, 79–104.

Fisher, W., Koch, E. & Hellner, E. (1971). *Neues Jahrb. Mineral. Monatsh.* pp. 227–237.

Frank, F. C. & Kasper, J. S. (1958). *Acta Cryst.* **11**, 184–190.

Gerstein, M., Tsai, J. & Levitt, M. (1995). *J. Mol. Biol.* **249**, 955–966.

Harris, L. A. & Yakel, H. L. (1969). *Acta Cryst.* B**25**, 1647–1651.

Hazen, R. M. & Finger, L. W. (1986). *J. Appl. Phys.* **59**, 3728–3733.

Hoppe, R. (1970). *Angew. Chem.* **82**, 7–16.

Huang, J. & Sleight, A. W. (1992). *J. Solid State Chem.* **100**, 170–178.

Kudoh, Y., Ito, E. & Takeda, H. (1987). *Phys. Chem. Mineral.* **14**, 350–354.

Murakami, T., Takeuchi, Y. & Yamanaka, T. (1984). *Z. Kristallogr.* **166**, 263–275.

Nguyen, N., Choisnet, J. & Raveau, B. (1980). *J. Solid State Chem.* **34**, 1–9.

Niggli, P. (1927). *Z. Kristallogr.* **65**, 391–415.

O'Keeffe, M. (1979). *Acta Cryst.* A**35**, 772–775.

Pearson, W. (1972). *The Crystal Chemistry and Physics of Metals and Alloys*. New York: Wiley Interscience.

Preparata, F. P. & Shamos, M. I. (1985). *Computational Geometry*. New York: Springer-Verlag.

Shannon, R. D. (1976). *Acta Cryst.* A**32**, 751–767.

Waber, J. T. & Cromer, D. T. (1965). *J. Chem. Phys.* **42**, 4116–4123.